SUMACHAY

SUMACHAY LIFTS

Parts Catalog

SESR15+ / SELR20+

Exploded diagrams and part references for the SESR15+ and SELR20+ lithium electric pallet jacks

Revision
v1.1 · 2026-10-16

Language
EN

Parts & support
sales@sumachay.com

How to request a part

1. Find your **model** and **serial number** on the data plate of your machine.
2. Find the **figure** that shows the area of the machine, then the **item number** on the diagram.
3. Note the **Sumachay reference** from the parts table (for example EPJ-F01-06).
4. Email **sales@sumachay.com** with your model, serial number, figure, item number and Sumachay reference. A photo of the part helps.

Contact Sumachay for parts availability and pricing.

Reading the "Applies to" column

SESR15+ / SELR20+	Fits both models.
SESR15+ only / SELR20+ only	Fits that model only.
Match your fork size	Several sizes exist; choose the one that matches your forks.
Confirm with service	Varies by unit or version; confirm with Sumachay before ordering.

> Item numbers with a letter (for example 11B) are alternate versions of the same item. Confirm which version your unit uses before ordering.
> Items marked K1, K2… are service kits or sub-assemblies that are not called out on the diagram. An item shown on a diagram but not listed in its table is supplied only as part of an assembly or kit; contact Sumachay.
> SELR20+-CS (cold-storage) owners: confirm every part with Sumachay service before ordering.
> Diagrams show a typical configuration; your unit may differ.

Contents

1. Figure 1 — Handle assembly
2. Figure 2 — Control box assembly
3. Figure 3 — Drive system
4. Figure 4 — Drive unit assembly
5. Figure 5 — Gearbox assembly
6. Figure 6 — Hydraulic unit assembly
7. Figure 7 — Hydraulic unit parts
8. Figure 8 — Lift cylinder assembly (Ø35)
9. Figure 9 — Frame
10. Figure 10 — Tandem (double) load wheel assembly
11. Figure 11 — Single load wheel assembly
12. Figure 12 — Charger and plug
13. Figure 13 — Cable harness

Figure 1 — Handle assembly

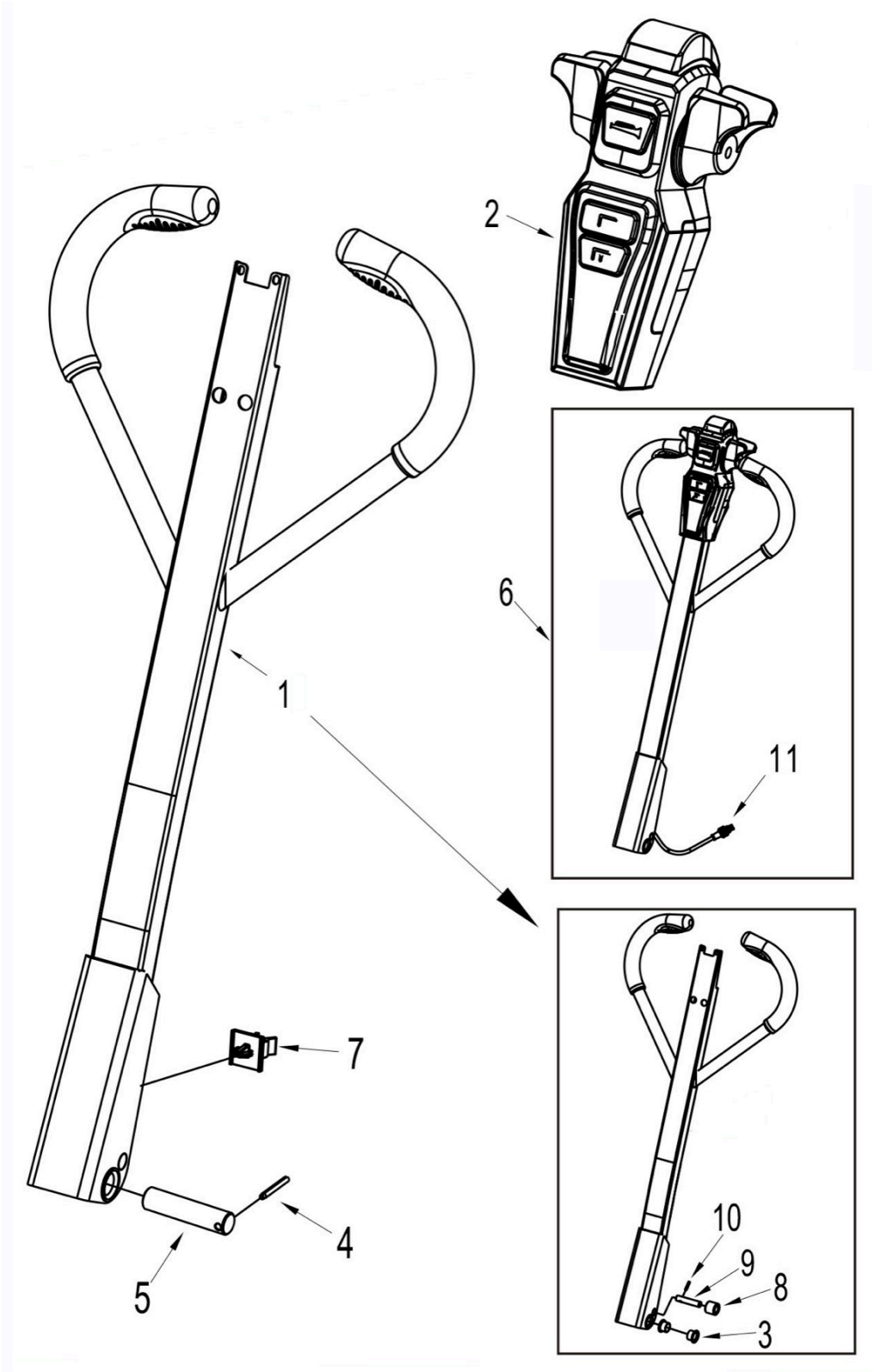

Figure 1 — Handle assembly: parts

Item	Sumachay ref.	Description	Spec	Qty	Applies to
1	EPJ-F01-01	Handle tube assembly (includes items 1, 4, 10, 11, 12)		1	SESR15+ / SELR20+
2	EPJ-F01-02	Control box assembly		1	SESR15+ / SELR20+
3	EPJ-F01-03	Self-Lubricating Bearing 20*30*16.5	20*30*16.5	2	SESR15+ / SELR20+
4	EPJ-F01-04	Spring pin Ø5*35	Ø5*35	2	SESR15+ / SELR20+
5	EPJ-F01-05	Handle shaft Ø20*100	Ø20*100	1	SESR15+ / SELR20+
6	EPJ-F01-06	Complete handle assembly (includes items 1, 2, 7, 12)		1	SESR15+ / SELR20+
7	EPJ-F01-07	Plastic cable clamp		1	SESR15+ / SELR20+
8	EPJ-F01-08	Pressure Roller with bearing		1	SESR15+ / SELR20+
9	EPJ-F01-09	Roller Axle		1	SESR15+ / SELR20+
10	EPJ-F01-10	Spring pin 4*20	4*20	1	SESR15+ / SELR20+
11	EPJ-F01-11	Handle cables		1	SESR15+ / SELR20+
11B	EPJ-F01-11B	Handle cables (alternate version)		1	SESR15+ / SELR20+

Figure 2 — Control box assembly

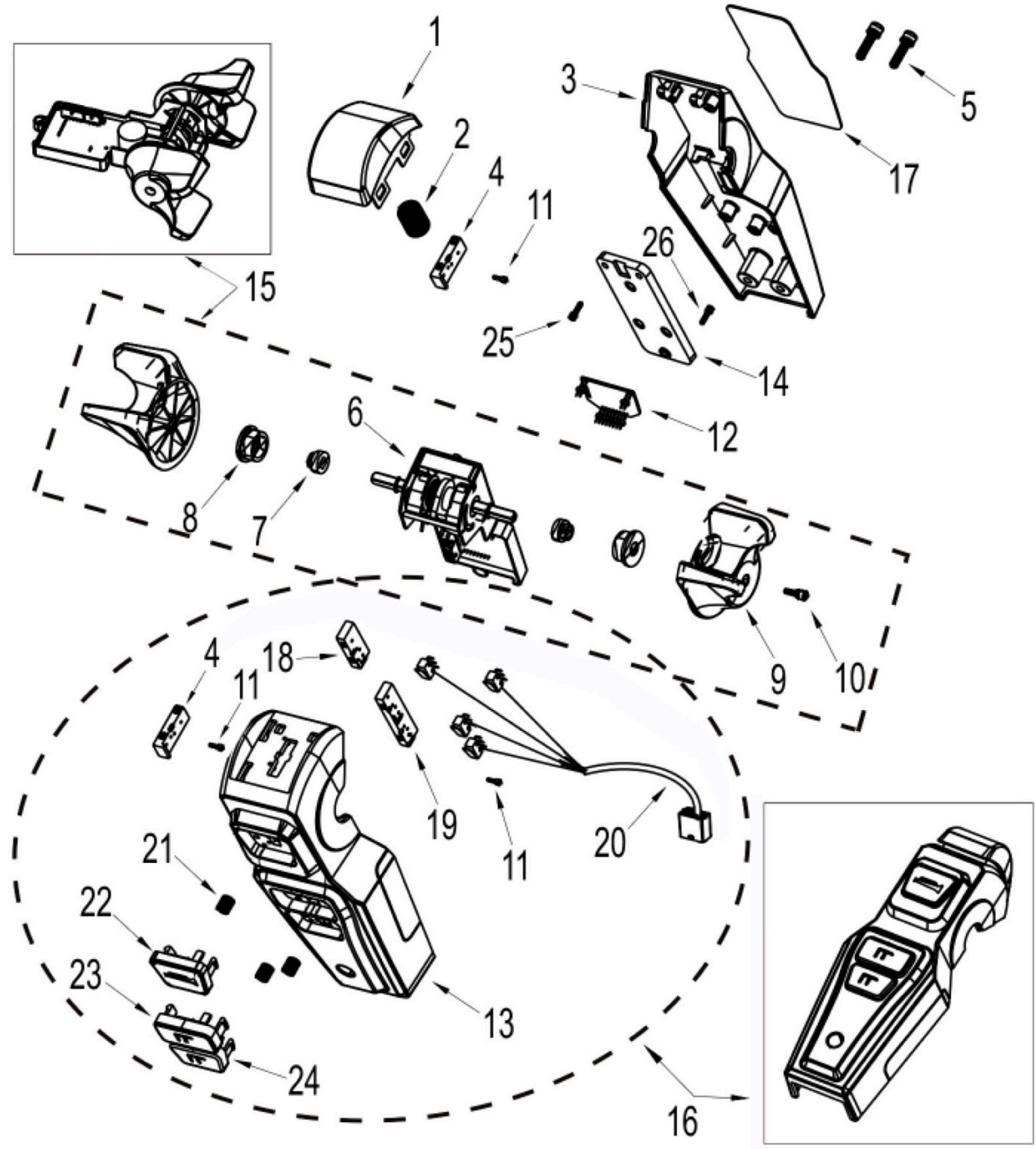

Figure 2 — Control box assembly: parts

Item	Sumachay ref.	Description	Spec	Qty	Applies to
1	EPJ-F02-01	Emergency reverse button		1	SESR15+ / SELR20+
2	EPJ-F02-02	Spring		1	SESR15+ / SELR20+
3	EPJ-F02-03	Bottom cover		1	SESR15+ / SELR20+
4	EPJ-F02-04	Seat		1	SESR15+ / SELR20+
5	EPJ-F02-05	Screw M5*25	M5*25	2	SESR15+ / SELR20+
6	EPJ-F02-06	Potentiometer assembly		1	SESR15+ / SELR20+
7	EPJ-F02-07	Inner Column spacer		2	SESR15+ / SELR20+
8	EPJ-F02-08	Outer Column spacer		2	SESR15+ / SELR20+
9	EPJ-F02-09	Control Knob		2	SESR15+ / SELR20+
10	EPJ-F02-10	Screw M3*10	M3*10	2	SESR15+ / SELR20+
11	EPJ-F02-11	Screw M1.9*12	M1.9*12	8	SESR15+ / SELR20+
12	EPJ-F02-12	Monitor		1	SESR15+ / SELR20+
13	EPJ-F02-13	Front cover		1	SESR15+ / SELR20+
14	EPJ-F02-14	Board		1	SESR15+ / SELR20+
15	EPJ-F02-15	Potentiometer assembly (Inc.6~10)		1	SESR15+ / SELR20+
16	EPJ-F02-16	Handle upper cover assembly (Inc. Item 4, 11, 13, 18~24)		1	SESR15+ / SELR20+
17	EPJ-F02-17	Metal dome		2	SESR15+ / SELR20+
18	EPJ-F02-18	Seat of horn switch		1	SESR15+ / SELR20+
19	EPJ-F02-19	Seat of lifting/lowering switch		1	SESR15+ / SELR20+
20	EPJ-F02-20	Cable harness		1	SESR15+ / SELR20+
21	EPJ-F02-21	Spring		1	SESR15+ / SELR20+
22	EPJ-F02-22	Horn button		1	SESR15+ / SELR20+
23	EPJ-F02-23	Lifting button		1	SESR15+ / SELR20+
24	EPJ-F02-24	Lowering button		1	SESR15+ / SELR20+
25	EPJ-F02-25	Screw M4*12	M4*12	3	SESR15+ / SELR20+
26	EPJ-F02-26	Screw M4*6	M4*6	3	SESR15+ / SELR20+
K1	EPJ-F02-K1	Handle bottom cover assembly (Inc.3/4/5/11/12/14/15/17/26)		1	SESR15+ / SELR20+

Figure 3 — Drive system

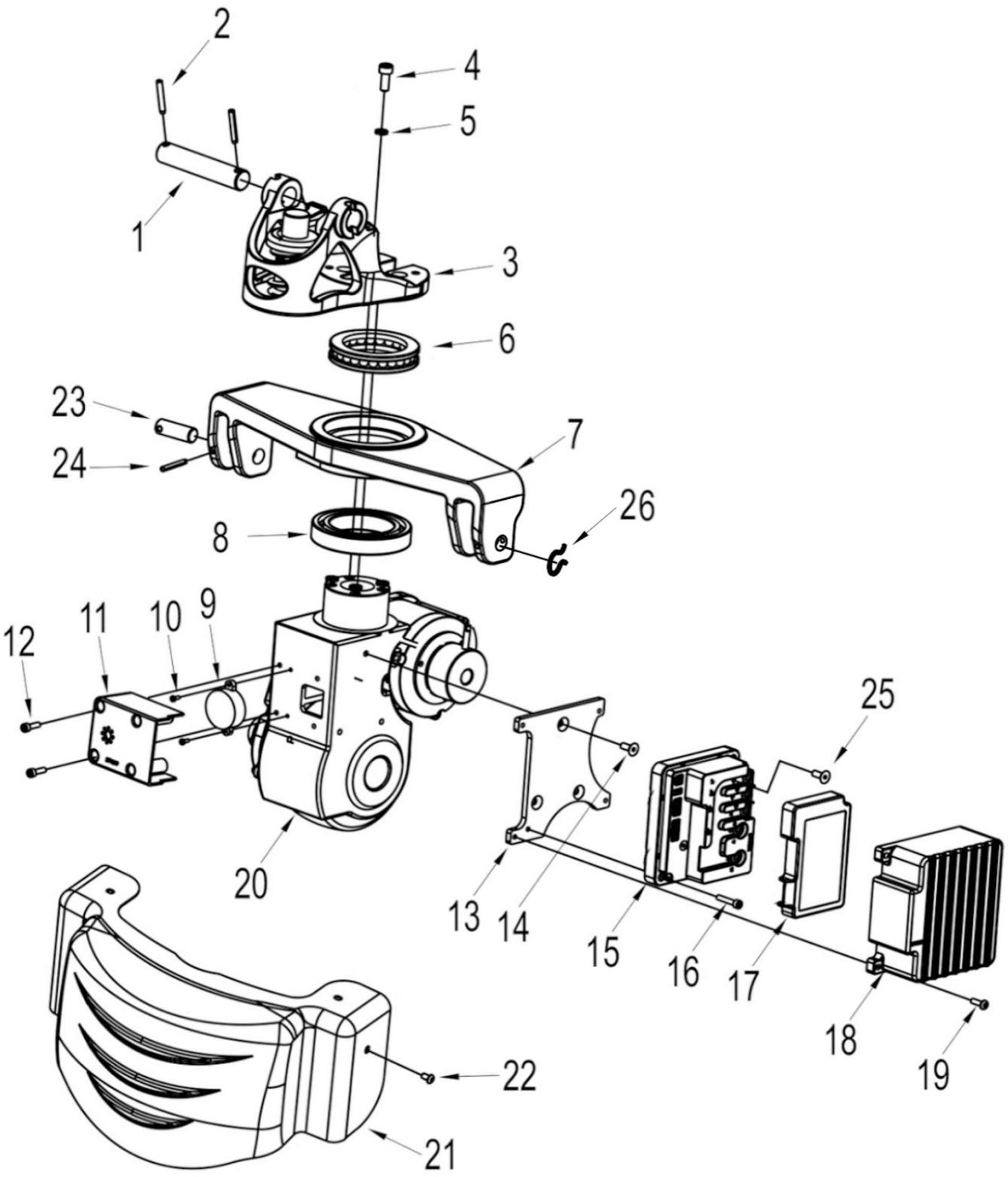

Figure 3 — Drive system: parts

Item	Sumachay ref.	Description	Spec	Qty	Applies to
1	EPJ-F03-01	Handle shaft Ø20*100	Ø20*100	1	SESR15+ / SELR20+
2	EPJ-F03-02	Spring pin Ø5*35	Ø5*35	2	SESR15+ / SELR20+
3	EPJ-F03-03	Handle socket assembly		1	SESR15+ / SELR20+
4	EPJ-F03-04	Screw M8*25	M8*20	4	SESR15+ / SELR20+
5	EPJ-F03-05	Washer Ø8	Ø8	4	SESR15+ / SELR20+
6	EPJ-F03-06	Bearing 51113		1	SESR15+ / SELR20+
7	EPJ-F03-07	Continuous frame		1	SESR15+ / SELR20+
8	EPJ-F03-08	Bearing 6013-2RS	6013-2RS	1	SESR15+ / SELR20+
9	EPJ-F03-09	Buzzer		1	SESR15+ / SELR20+
10	EPJ-F03-10	Screw M4*8	M4*8	2	SESR15+ / SELR20+
11	EPJ-F03-11	Wires cover (SESR15+)		1	SESR15+ only
11B	EPJ-F03-11B	Wires cover (SELR20+)		1	SELR20+ only
12	EPJ-F03-12	Screw M5*16	M5*16	4	SESR15+ / SELR20+
13	EPJ-F03-13	Mounting plate for controller		1	SESR15+ / SELR20+
14	EPJ-F03-14	Screw M6*16	M6*16	3	SESR15+ / SELR20+
15	EPJ-F03-15	Controller		1	SESR15+ / SELR20+
16	EPJ-F03-16	Screw M5*25	M5*25	2	SESR15+ / SELR20+
17	EPJ-F03-17	Wires cover for controller		1	SESR15+ / SELR20+
18	EPJ-F03-18	Controller cover		1	SESR15+ / SELR20+
19	EPJ-F03-19	Screw M5*16	M5*16	3	SESR15+ / SELR20+
20	EPJ-F03-20	Driving unit assembly (0.75 kW motor) (SESR15+)		1	SESR15+ only
20B	EPJ-F03-20B	Driving unit assembly (1.0 kW motor) (SELR20+)		1	SELR20+ only
21	EPJ-F03-21	Cover standard 30mm ground clearance	30 mm ground clearance	1	SESR15+ / SELR20+
22	EPJ-F03-22	Screw M6*12	M6*12	4	SESR15+ / SELR20+
23	EPJ-F03-23	Coupling shaft		2	SESR15+ / SELR20+
24	EPJ-F03-24	Spring pin Ø5*40	Ø5*40	2	SESR15+ / SELR20+
25	EPJ-F03-25	Screw M4*8	M4*8	5	SESR15+ / SELR20+
26	EPJ-F03-26	Nylon gasket 3mm		As needed	SESR15+ / SELR20+
26B	EPJ-F03-26B	Nylon gasket 2mm		As needed	SESR15+ / SELR20+

Figure 4 — Drive unit assembly

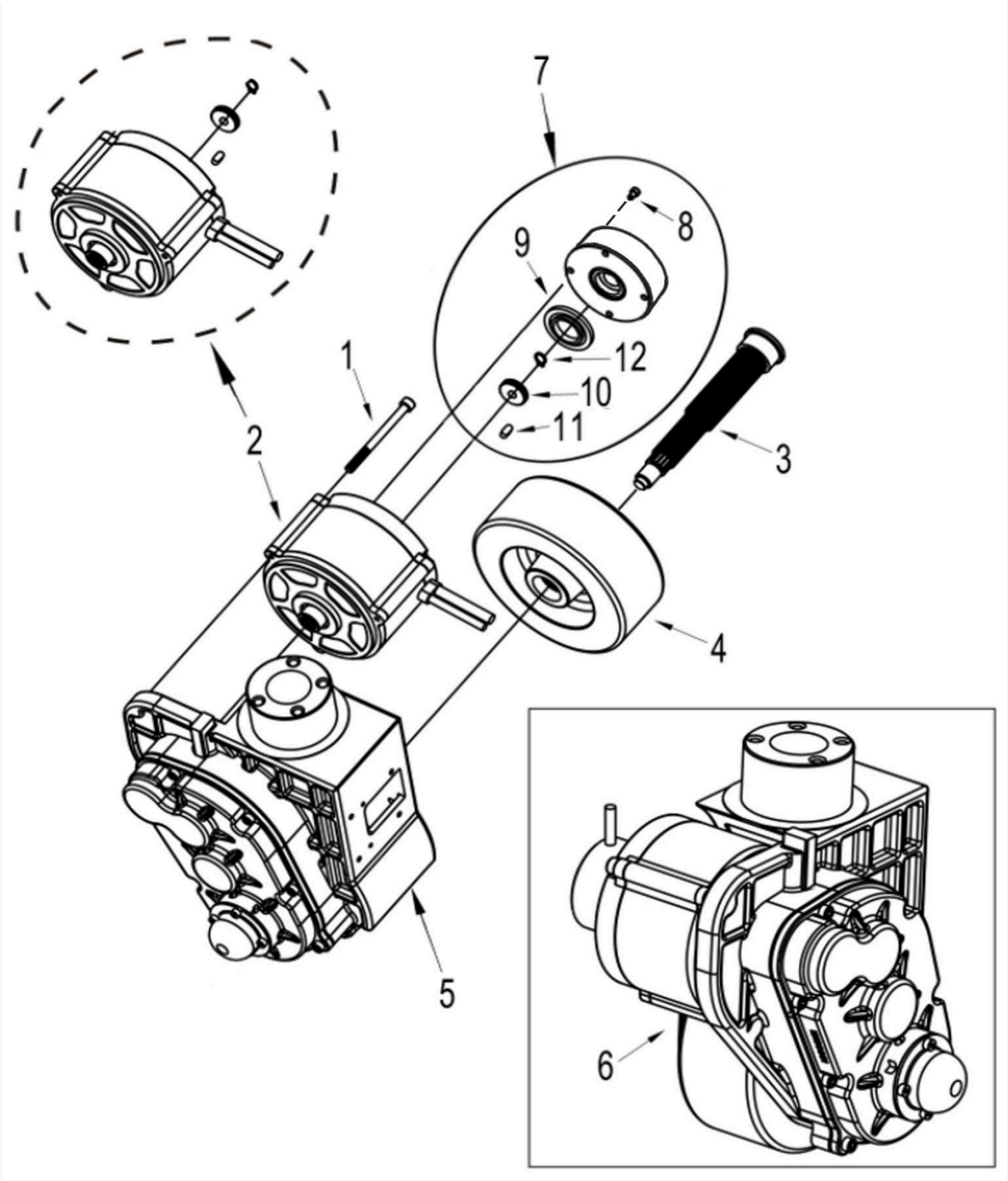

Figure 4 — Drive unit assembly: parts

Item	Sumachay ref.	Description	Spec	Qty	Applies to
1	EPJ-F04-01	Screw M6*80 for 0.75 kW drive motor	M6*80	3	SESR15+ only
1B	EPJ-F04-01B	Screw M6*90 for 1.0 kW drive motor	M6*90	3	SELR20+ only
2	EPJ-F04-02	Motor assembly with spline sleeve 0.75 kW (SESR15+)		1	SESR15+ only
2B	EPJ-F04-02B	Motor assembly with spline sleeve 1.0 kW (SELR20+)		1	SELR20+ only
3	EPJ-F04-03	Axle		1	SESR15+ / SELR20+
4	EPJ-F04-04	Drive wheel Ø140*55mm	Ø140*55	1	SESR15+ / SELR20+
5	EPJ-F04-05	Gearbox assembly (No motor, drive wheel, axle, etc)		1	SESR15+ / SELR20+
6	EPJ-F04-06	Driving unit assembly (0.75 kW motor) (SESR15+)		1	SESR15+ only
6B	EPJ-F04-06B	Driving unit assembly (1.0 kW motor) (SELR20+)		1	SELR20+ only
7	EPJ-F04-07	Brake assembly		1	SESR15+ / SELR20+
8	EPJ-F04-08	Screw M4*10	M4*10	4	SESR15+ / SELR20+
9	EPJ-F04-09	Brake pad		1	SESR15+ / SELR20+
10	EPJ-F04-10	Spline sleeve for brake		1	SESR15+ / SELR20+
11	EPJ-F04-11	Flat key		1	SESR15+ / SELR20+
12	EPJ-F04-12	Circlip		1	SESR15+ / SELR20+

Figure 5 — Gearbox assembly

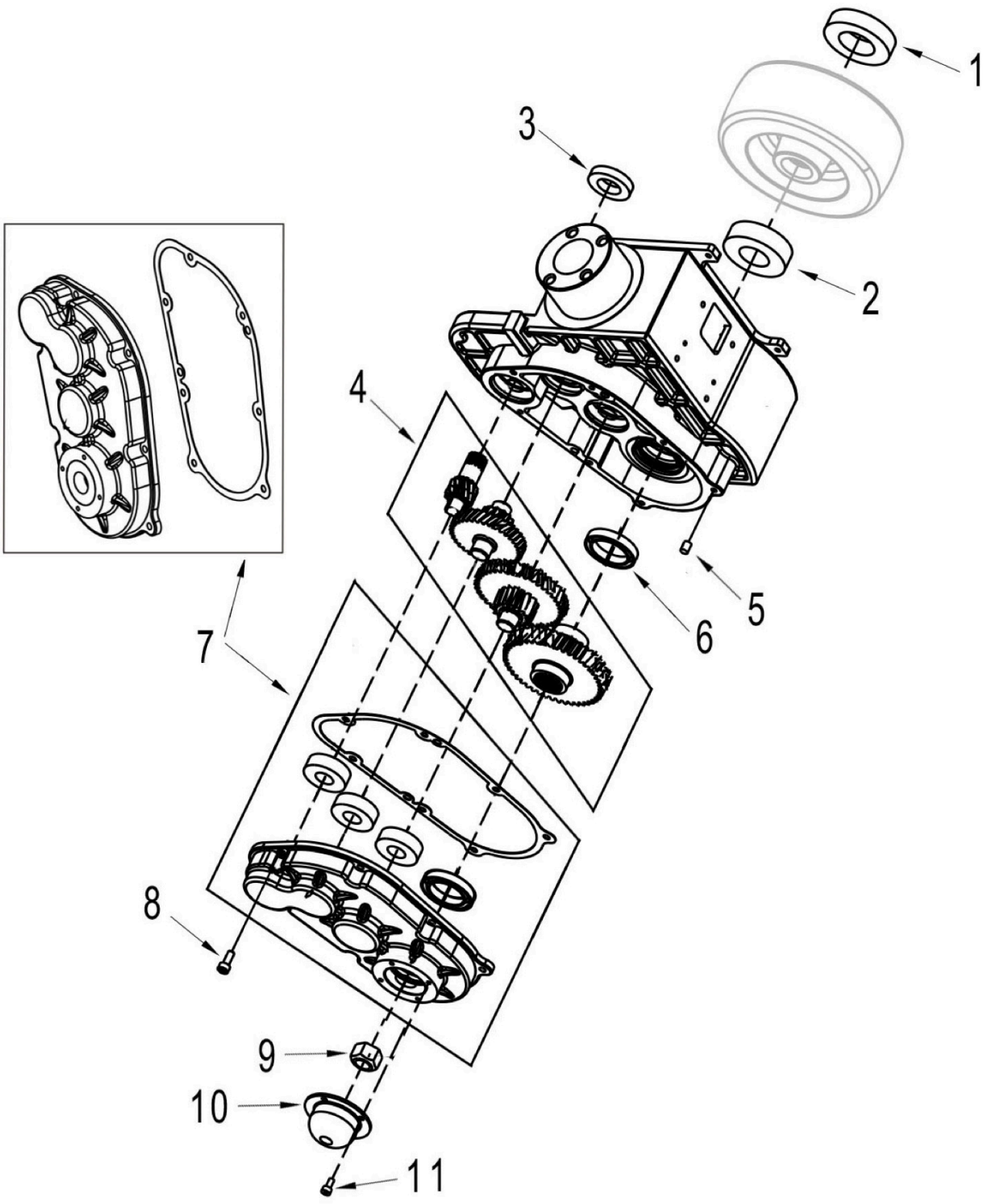

Figure 5 — Gearbox assembly: parts

Item	Sumachay ref.	Description	Spec	Qty	Applies to
1	EPJ-F05-01	Bearing 6006-2Z	6006-2Z	1	SESR15+ / SELR20+
2	EPJ-F05-02	Bearing 6205-2Z	6205-2Z	1	SESR15+ / SELR20+
3	EPJ-F05-03	Oil seal		1	SESR15+ / SELR20+
4	EPJ-F05-04	Gears assembly		1	SESR15+ / SELR20+
5	EPJ-F05-05	Locating pin		2	SESR15+ / SELR20+
6	EPJ-F05-06	Framework oil seal		2	SESR15+ / SELR20+
7	EPJ-F05-07	Gearbox cover assembly		1	SESR15+ / SELR20+
8	EPJ-F05-08	Screw M6*20		7	SESR15+ / SELR20+
9	EPJ-F05-09	Nut		1	SESR15+ / SELR20+
10	EPJ-F05-10	Nut cap		1	SESR15+ / SELR20+
11	EPJ-F05-11	Screw M4*10	M4*10	4	SESR15+ / SELR20+

Figure 6 — Hydraulic unit assembly

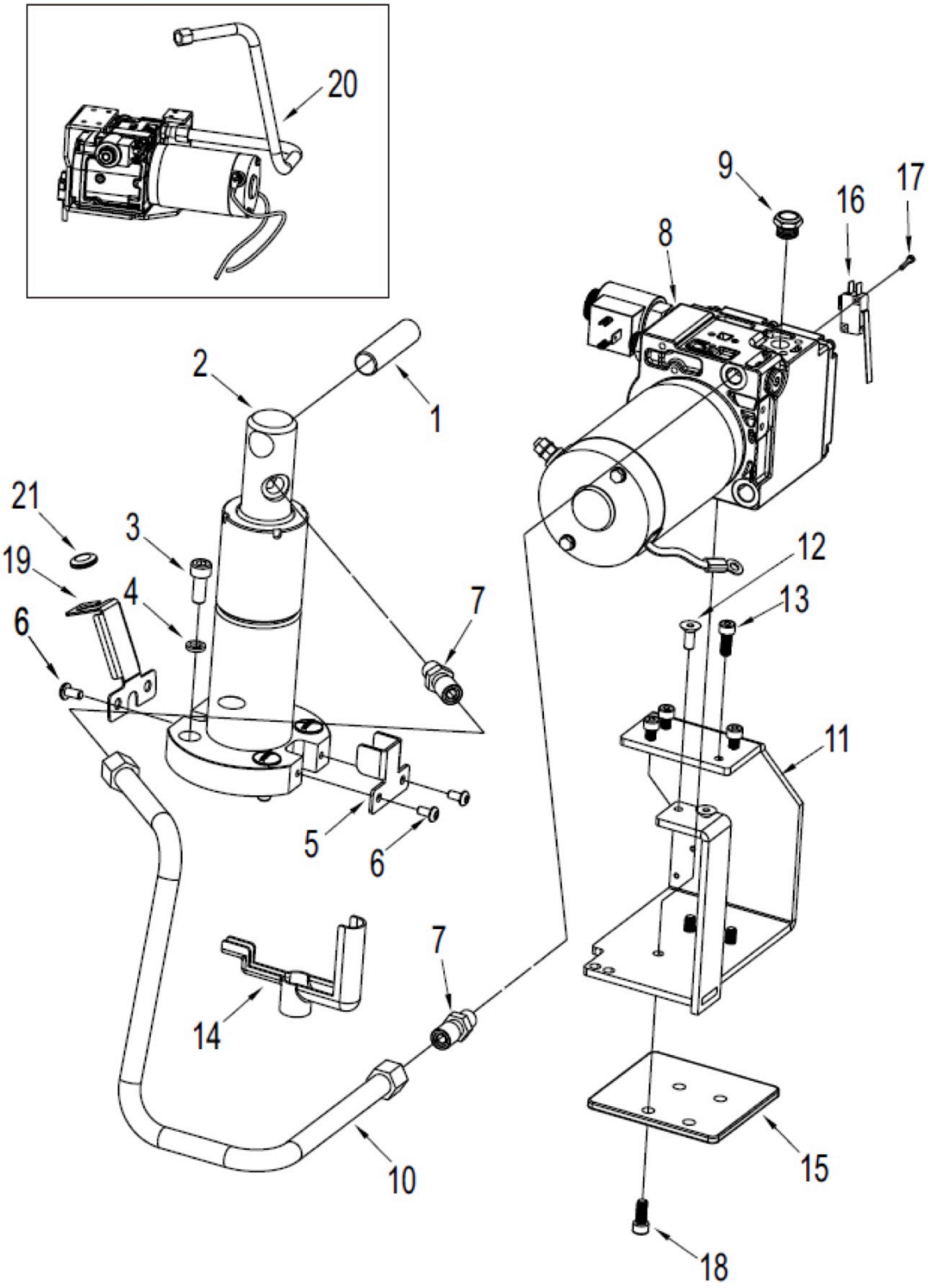

Figure 6 — Hydraulic unit assembly: parts

Item	Sumachay ref.	Description	Spec	Qty	Applies to
1	EPJ-F06-01	Fixed shaft of piston rod		1	SESR15+ / SELR20+
2	EPJ-F06-02	Cylinder assembly Ø35	Ø35	1	SESR15+ / SELR20+
3	EPJ-F06-03	Screw M8*20	M8*20	4	SESR15+ / SELR20+
4	EPJ-F06-04	Washer Ø8	Ø8	4	SESR15+ / SELR20+
5	EPJ-F06-05	Clip		1	SESR15+ / SELR20+
6	EPJ-F06-06	Screw M6*12	M6*10	4	SESR15+ / SELR20+
7	EPJ-F06-07	Oil pipe connector		2	SESR15+ / SELR20+
8	EPJ-F06-08	Hydraulic unit assembly 1.5T		1	Confirm version with service
8B	EPJ-F06-08B	Hydraulic unit assembly 2.0T		1	Confirm version with service
9	EPJ-F06-09	Plug Screw		1	SESR15+ / SELR20+
10	EPJ-F06-10	Oil pipe		1	SESR15+ / SELR20+
11	EPJ-F06-11	Mounting plate		1	SESR15+ / SELR20+
12	EPJ-F06-12	Screw M6*16	M6*16	1	SESR15+ / SELR20+
13	EPJ-F06-13	Screw M6*16	M6*16	5	SESR15+ / SELR20+
14	EPJ-F06-14	Cable sleeve		1	SESR15+ / SELR20+
15	EPJ-F06-15	Oil tank block		1	SESR15+ / SELR20+
16	EPJ-F06-16	Lifting limitation inching switch		1	SESR15+ / SELR20+
17	EPJ-F06-17	Screw M3*16	M3*16	2	SESR15+ / SELR20+
18	EPJ-F06-18	Screw M6*18	M6*18	4	SESR15+ / SELR20+
19	EPJ-F06-19	Mounting plate for guide cable		1	SESR15+ / SELR20+
20	EPJ-F06-20	Hydraulic unit assembly with mounting plate & oil pipe (Inc.7~13,15~18)		1	Confirm version with service
21	EPJ-F06-21	Rubber sleeve		1	SESR15+ / SELR20+

Figure 7 — Hydraulic unit parts

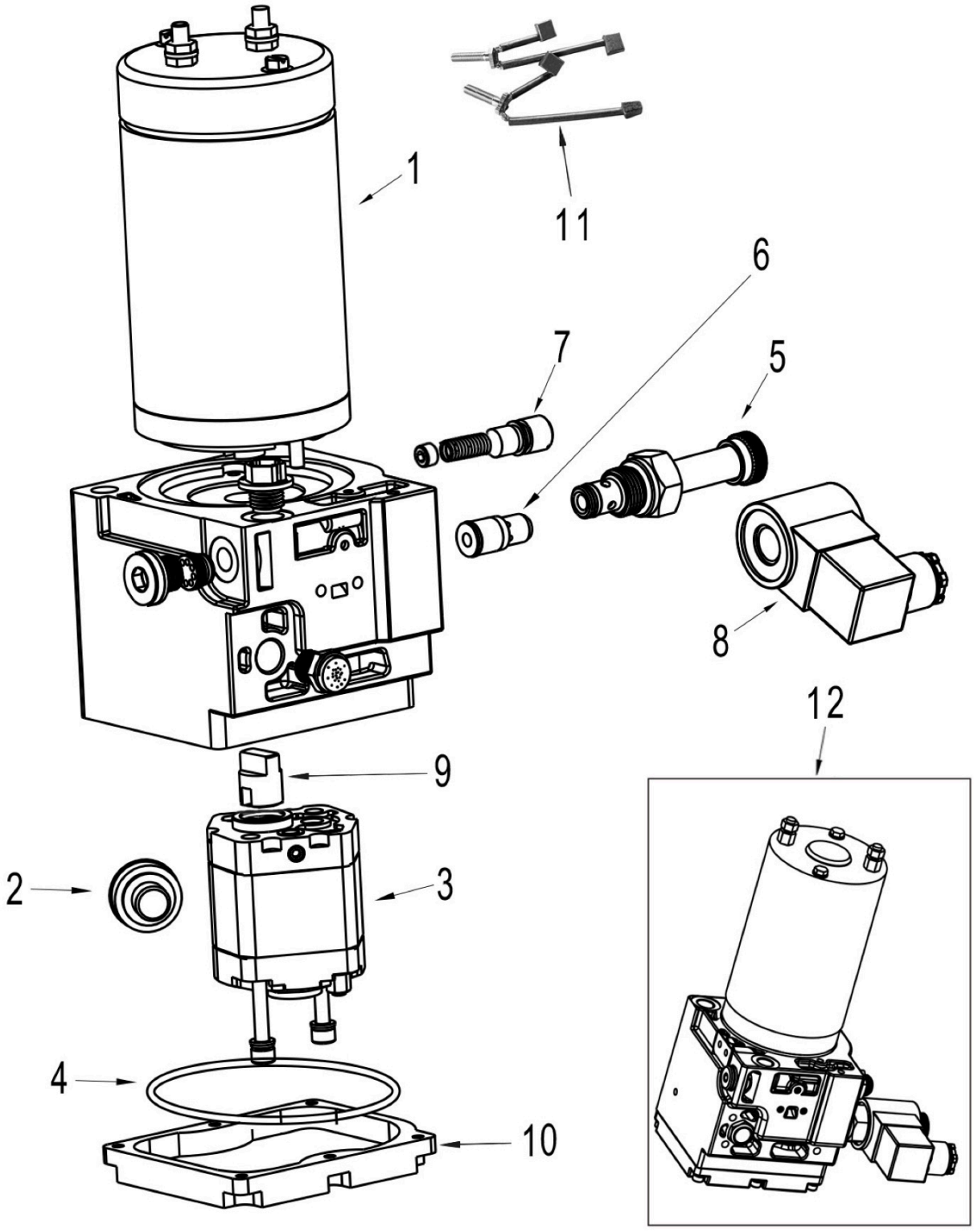

Figure 7 — Hydraulic unit parts: parts

Item	Sumachay ref.	Description	Spec	Qty	Applies to
1	EPJ-F07-01	Hydraulic motor		1	SESR15+ / SELR20+
2	EPJ-F07-02	Oil strainer		1	SESR15+ / SELR20+
3	EPJ-F07-03	Hydraulic pump		1	SESR15+ / SELR20+
4	EPJ-F07-04	O-ring Ø90*2.65	Ø90*2.65	1	SESR15+ / SELR20+
5	EPJ-F07-05	Solenoid valve		1	SESR15+ / SELR20+
6	EPJ-F07-06	Pressure relief valve		1	SESR15+ / SELR20+
7	EPJ-F07-07	Relief valve		1	SESR15+ / SELR20+
8	EPJ-F07-08	Coil		1	SESR15+ / SELR20+
9	EPJ-F07-09	Coupling		1	SESR15+ / SELR20+
10	EPJ-F07-10	Lower cover of oil box		1	SESR15+ / SELR20+
11	EPJ-F07-11	Carbon brush		1 pair	SESR15+ / SELR20+
12	EPJ-F07-12	Hydraulic unit assembly 1.5T		1	Confirm version with service
12B	EPJ-F07-12B	Hydraulic unit assembly 2.0T		1	Confirm version with service

Figure 8 — Lift cylinder assembly (Ø35)

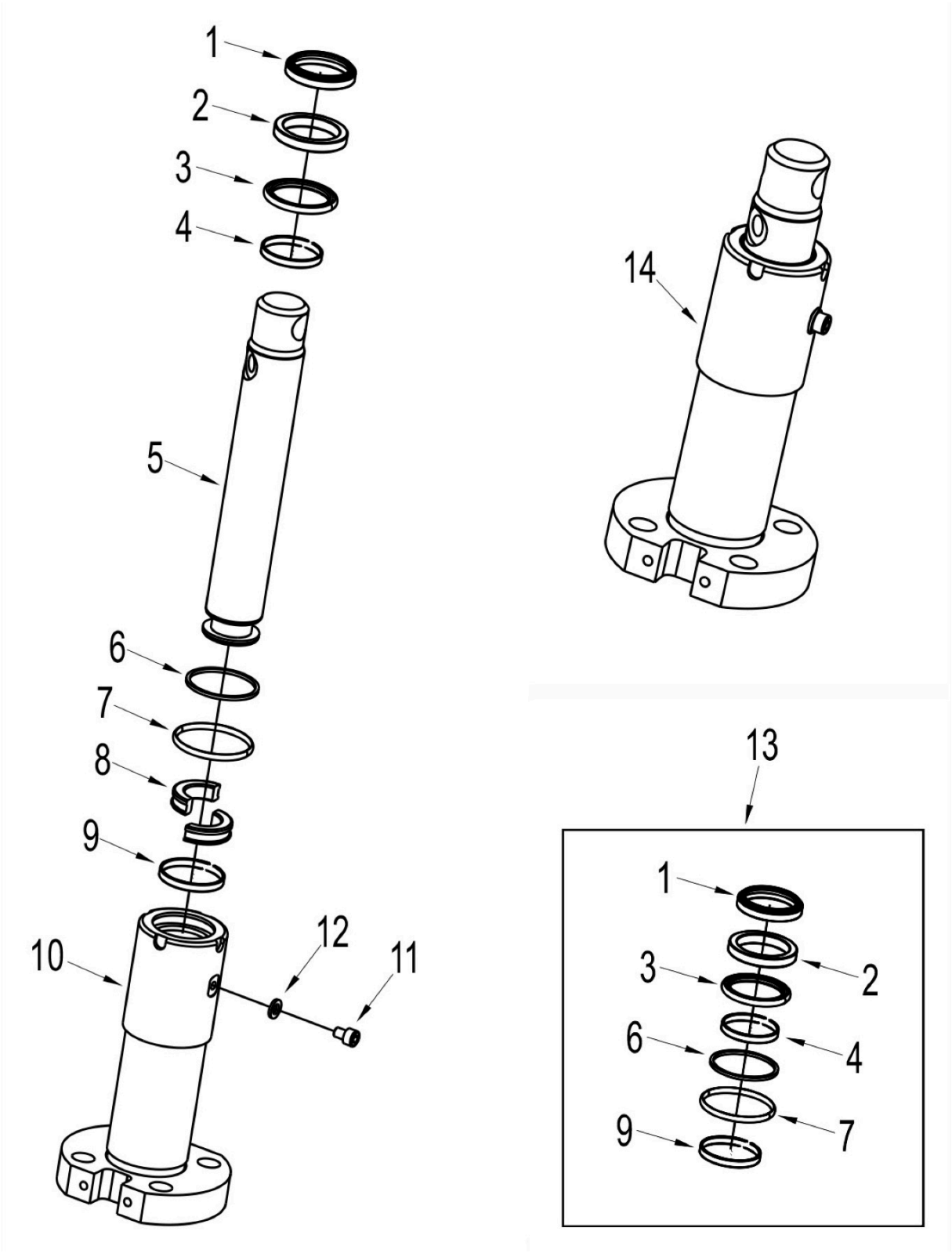

Figure 8 — Lift cylinder assembly (Ø35): parts

Item	Sumachay ref.	Description	Spec	Qty	Applies to
5	EPJ-F08-05	Piston rod		1	SESR15+ / SELR20+
8	EPJ-F08-08	Guide sleeve		1	SESR15+ / SELR20+
11	EPJ-F08-11	Screw M6*8	M6*8	1	SESR15+ / SELR20+
12	EPJ-F08-12	Washer		1	SESR15+ / SELR20+
13	EPJ-F08-13	Pump seal kits (Inc. item 1/2/3/4/6/7/9)		1	SESR15+ / SELR20+
14	EPJ-F08-14	Cylinder assembly Ø35	Ø35	1	SESR15+ / SELR20+

Figure 9 — Frame

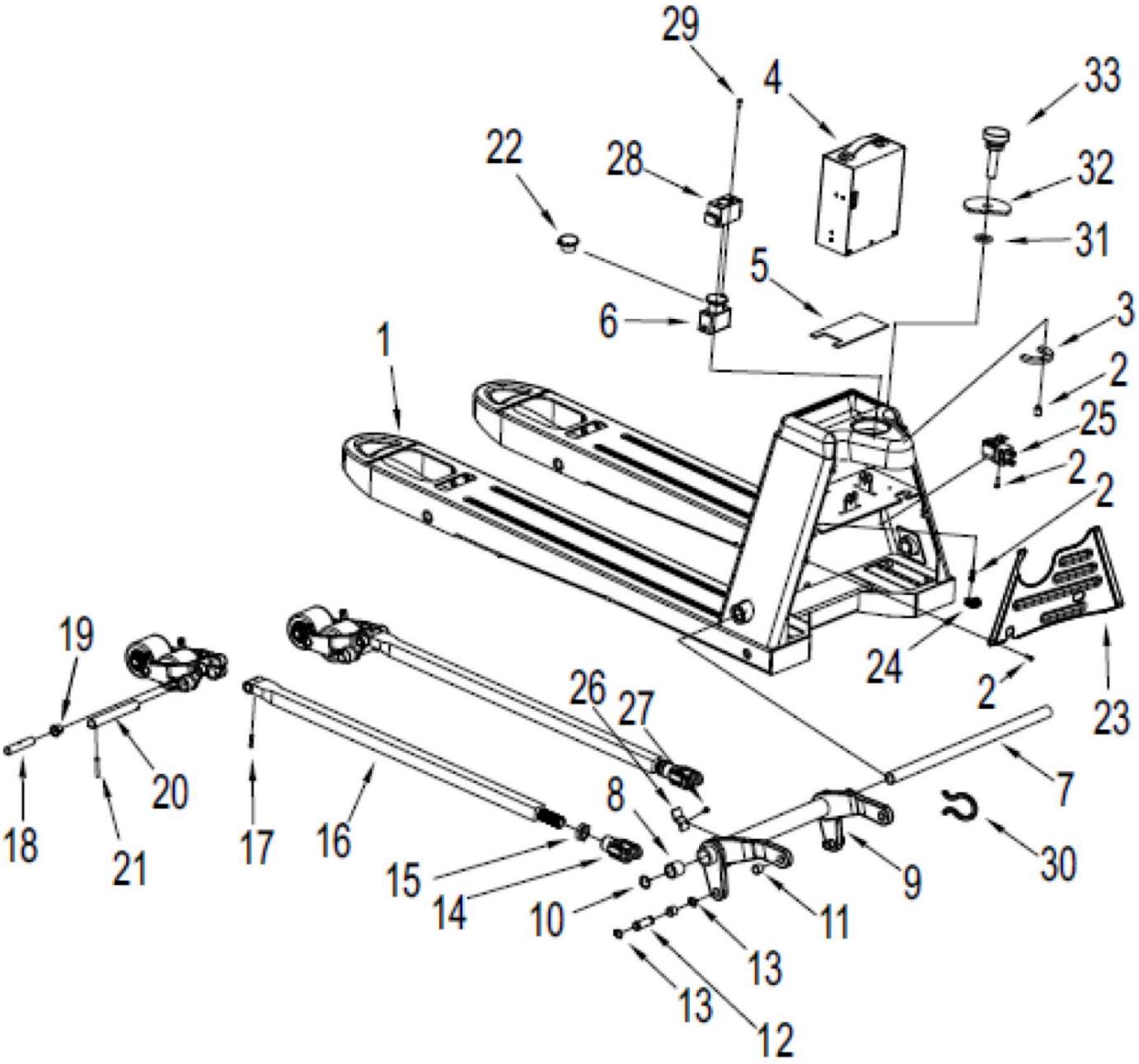

Figure 9 — Frame: parts

Item	Sumachay ref.	Description	Spec	Qty	Applies to
1	EPJ-F09-01	Frame 550*1150	550*1150	1	Match your fork size
1B	EPJ-F09-01B	Frame 685*1220	685*1220	1	Match your fork size
2	EPJ-F09-02	Screw M5*16	M5*16	2	SESR15+ / SELR20+
3	EPJ-F09-03	Cover plate		1	SESR15+ / SELR20+
4	EPJ-F09-04	Lithium battery pack, 48 V	Capacity varies by unit; confirm with service	1	Confirm with service
5	EPJ-F09-05	Cushion block		1	SESR15+ / SELR20+
6	EPJ-F09-06	Emergency Stop Switch		1	SESR15+ / SELR20+
7	EPJ-F09-07	Long Shaft (550)	550	1	Match your fork size
7B	EPJ-F09-07B	Long Shaft (685)	685	1	Match your fork size
8	EPJ-F09-08	Self-Lubricating Bearing 30*25*30	30*25*30	2	SESR15+ / SELR20+
9	EPJ-F09-09	Rocker Arm (550)	550	1	Match your fork size
9B	EPJ-F09-09B	Rocker Arm (685)	685	1	Match your fork size
10	EPJ-F09-10	Gasket Ø25	Ø25	2	SESR15+ / SELR20+
11	EPJ-F09-11	Self-Lubricating Bearing 16*18*15	16*18*15	4	SESR15+ / SELR20+
12	EPJ-F09-12	Shaft		2	SESR15+ / SELR20+
13	EPJ-F09-13	Gasket Ø16	Ø16	4	SESR15+ / SELR20+
14	EPJ-F09-14	Joint		2	SESR15+ / SELR20+
15	EPJ-F09-15	Nut M22*1.5	M22*1.5	2	SESR15+ / SELR20+
16	EPJ-F09-16	Connecting Rod (1150)	1150	2	Match your fork size
16B	EPJ-F09-16B	Connecting Rod (1220)	1220	2	Match your fork size
17	EPJ-F09-17	Spring pin Ø5*25	Ø5*25	2	SESR15+ / SELR20+
18	EPJ-F09-18	Connected Shaft		2	SESR15+ / SELR20+
19	EPJ-F09-19	Self-Lubricating Bearing 16*18*17	16*18*17	4	SESR15+ / SELR20+
20	EPJ-F09-20	Shaft		2	SESR15+ / SELR20+
21	EPJ-F09-21	Spring pin Ø5*35	Ø5*35	8	SESR15+ / SELR20+
22	EPJ-F09-22	Emergency Stop Switch Cover		1	SESR15+ / SELR20+
23	EPJ-F09-23	Cover 550	550	1	Match your fork size
23B	EPJ-F09-23B	Cover 685	685	1	Match your fork size
24	EPJ-F09-24	Cables clamp		1	SESR15+ / SELR20+
25	EPJ-F09-25	Contactor		1	SESR15+ / SELR20+
26	EPJ-F09-26	Limit block		1	SESR15+ / SELR20+
27	EPJ-F09-27	Screw M5*10	M5*10	2	SESR15+ / SELR20+
28	EPJ-F09-28	Switch sleeve		1	SESR15+ / SELR20+
29	EPJ-F09-29	Screw M5*12	M5*12	2	SESR15+ / SELR20+
30	EPJ-F09-30	Nylon gasket		As needed	SESR15+ / SELR20+
31	EPJ-F09-31	Washer		1	SESR15+ / SELR20+
32	EPJ-F09-32	Block		1	SESR15+ / SELR20+
33	EPJ-F09-33	Screw M8*30	M8*30	1	SESR15+ / SELR20+

Figure 10 — Tandem (double) load wheel assembly

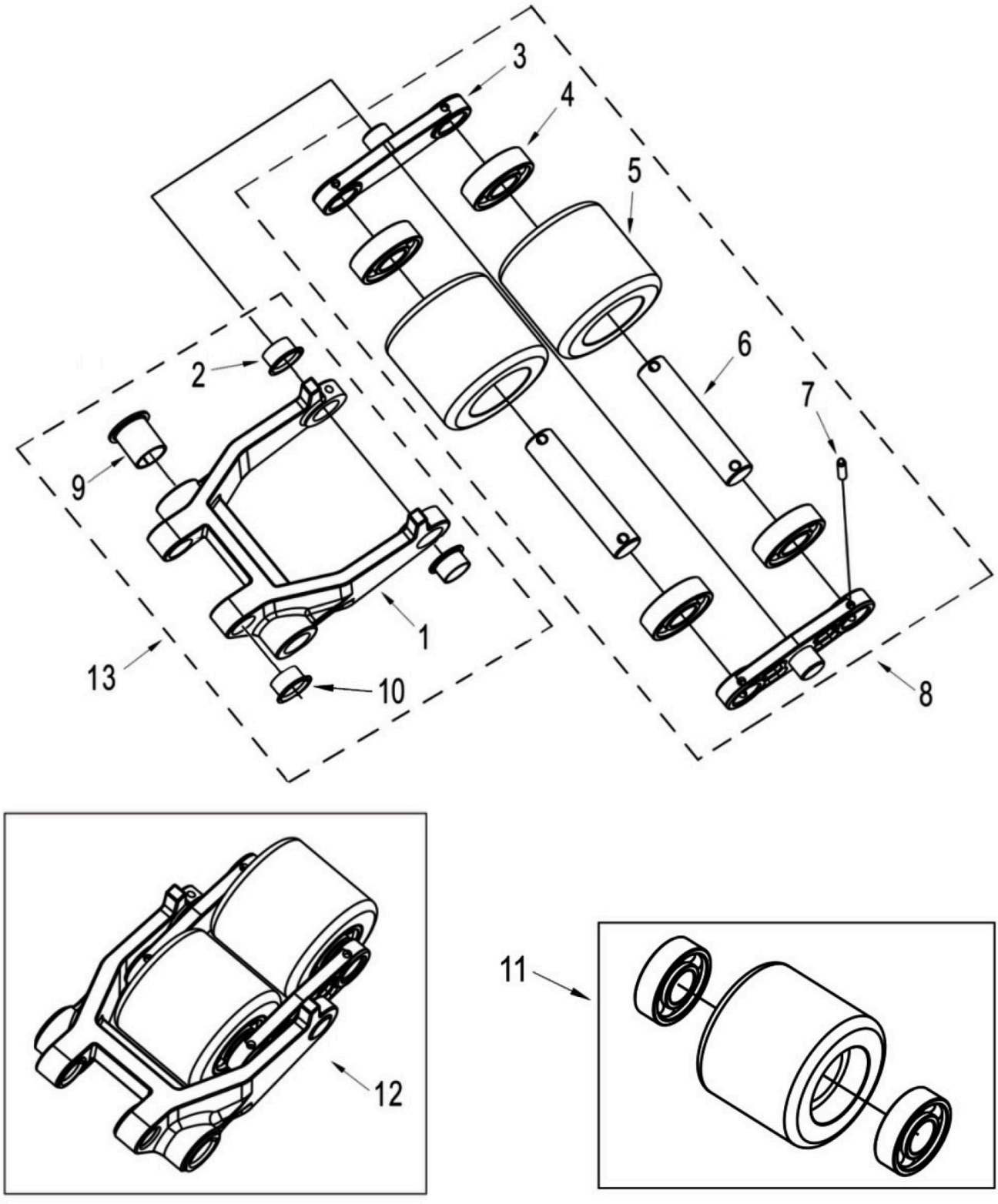

Figure 10 — Tandem (double) load wheel assembly: parts

Item	Sumachay ref.	Description	Spec	Qty	Applies to
1	EPJ-F10-01	Wheel Fork		2	SESR15+ / SELR20+
2	EPJ-F10-02	Self-Lubricating Bearing 18*20*12	18*20*12	4	SESR15+ / SELR20+
3	EPJ-F10-03	Tandem Mounting Plate		4	SESR15+ / SELR20+
4	EPJ-F10-04	Bearing 6204-2RS	6204-2RS	8	SESR15+ / SELR20+
5	EPJ-F10-05	Double PU Loading Wheel Ø70*70mm	70*70mm	4	SESR15+ / SELR20+
6	EPJ-F10-06	Axle		4	SESR15+ / SELR20+
7	EPJ-F10-07	Spring pin Ø5*30	Ø5*30	8	SESR15+ / SELR20+
8	EPJ-F10-08	Double PU Loading Wheel assembly		2	SESR15+ / SELR20+
9	EPJ-F10-09	Self-Lubricating Bearing 20*23*26.5	20*23*26.5	4	SESR15+ / SELR20+
10	EPJ-F10-10	Self-Lubricating Bearing 16*18*17	16*18*17	4	SESR15+ / SELR20+
11	EPJ-F10-11	Double PU Loading Wheel 70*70mm with bearing	With bearing	4	SESR15+ / SELR20+
12	EPJ-F10-12	Double loading wheel assembly with wheel fork		2	SESR15+ / SELR20+
13	EPJ-F10-13	Wheel Fork with Self-Lubricating Bearings for double loading wheel	With Self-Lubricating Bearings	2	SESR15+ / SELR20+

Figure 11 — Single load wheel assembly

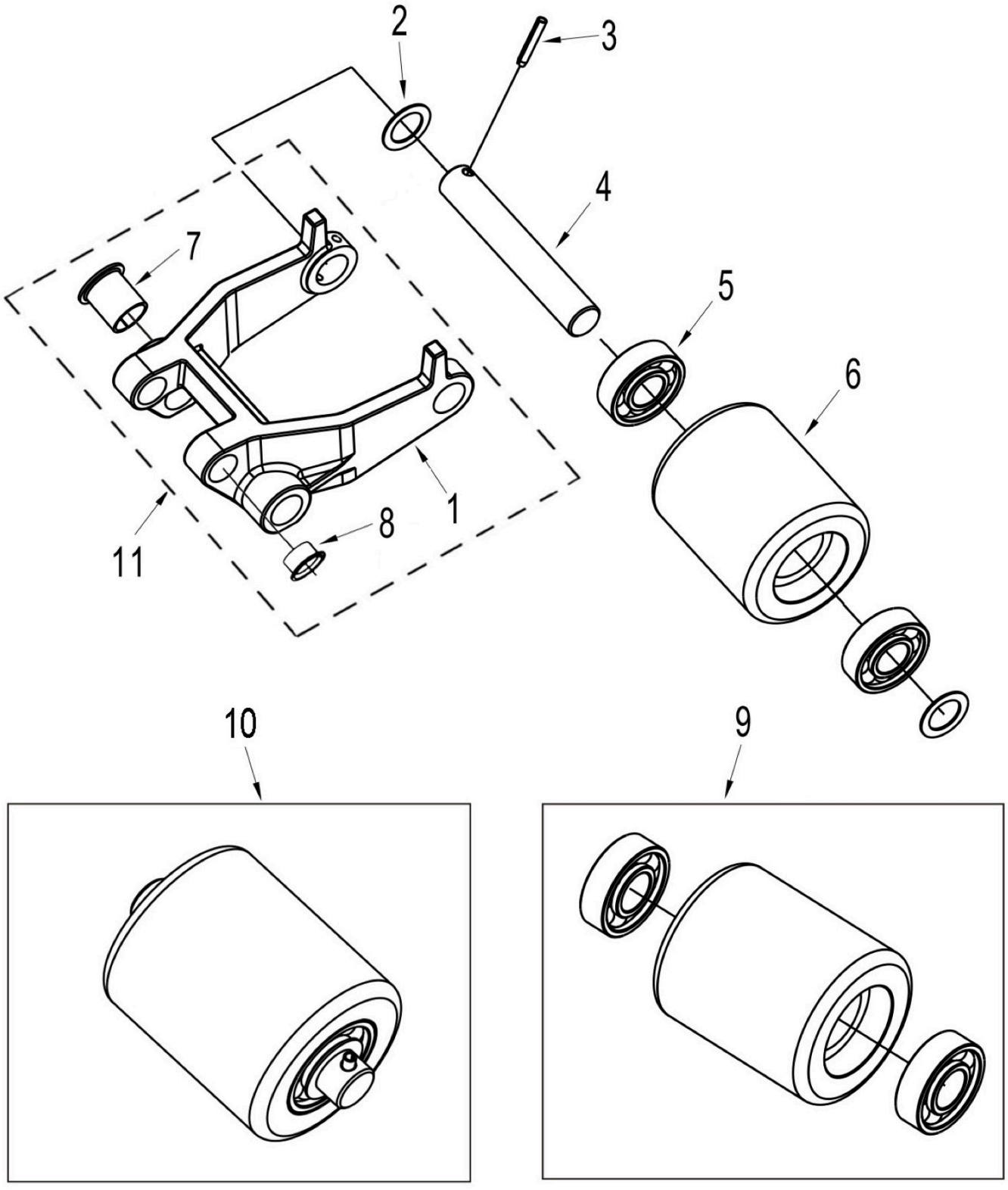

Figure 11 — Single load wheel assembly: parts

Item	Sumachay ref.	Description	Spec	Qty	Applies to
1	EPJ-F11-01	Wheel Fork		2	SESR15+ / SELR20+
2	EPJ-F11-02	Washer		4	SESR15+ / SELR20+
3	EPJ-F11-03	Spring pin Ø5*30	Ø5*30	8	SESR15+ / SELR20+
4	EPJ-F11-04	Axle		2	SESR15+ / SELR20+
5	EPJ-F11-05	Bearing 6204-2RS	6204-2RS	4	SESR15+ / SELR20+
6	EPJ-F11-06	Single PU Loading Wheel Ø70*93mm	Ø70*93mm	2	SESR15+ / SELR20+
7	EPJ-F11-07	Self-Lubricating Bearing 20*23*26.5	20*23*26.5	4	SESR15+ / SELR20+
8	EPJ-F11-08	Self-Lubricating Bearing 16*18*17	16*18*17	4	SESR15+ / SELR20+
9	EPJ-F11-09	Single PU Loading Wheel Ø70*93 with bearing	With bearing	2	SESR15+ / SELR20+
10	EPJ-F11-10	Single PU Loading Wheel assembly		2	SESR15+ / SELR20+
11	EPJ-F11-11	Wheel Fork with Self-Lubricating Bearings for single loading wheel	With bearing	2	SESR15+ / SELR20+

Figure 12 — Charger and plug

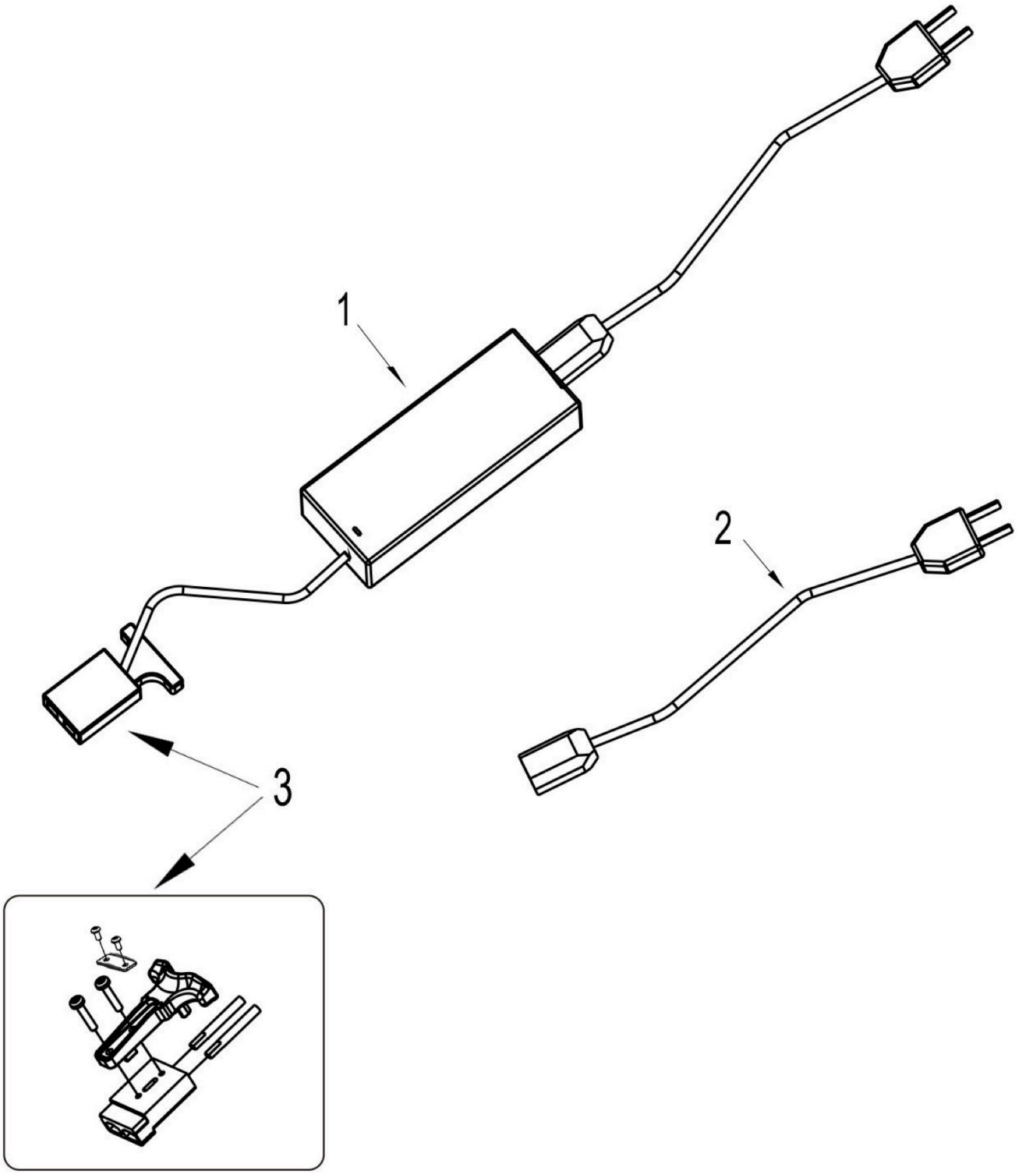

Figure 12 — Charger and plug: parts

Item	Sumachay ref.	Description	Spec	Qty	Applies to
1	EPJ-F12-01	Charger 48V/2A, 110~240V, North American plug	48V/2A, 110~240V	1	SESR15+ / SELR20+
1B	EPJ-F12-01B	Charger 48V/5A, 110~240V, North American plug	48V/5A, 110~240V	1	SESR15+ / SELR20+
2	EPJ-F12-02	Plug for Charger 48V/2A North American plug		1	SESR15+ / SELR20+
2B	EPJ-F12-02B	Plug for Charger 48V/5A North American plug		1	SESR15+ / SELR20+
3	EPJ-F12-03	Plug assembly (connector, plug, screws, handle)		1	SESR15+ / SELR20+

Figure 13 — Cable harness

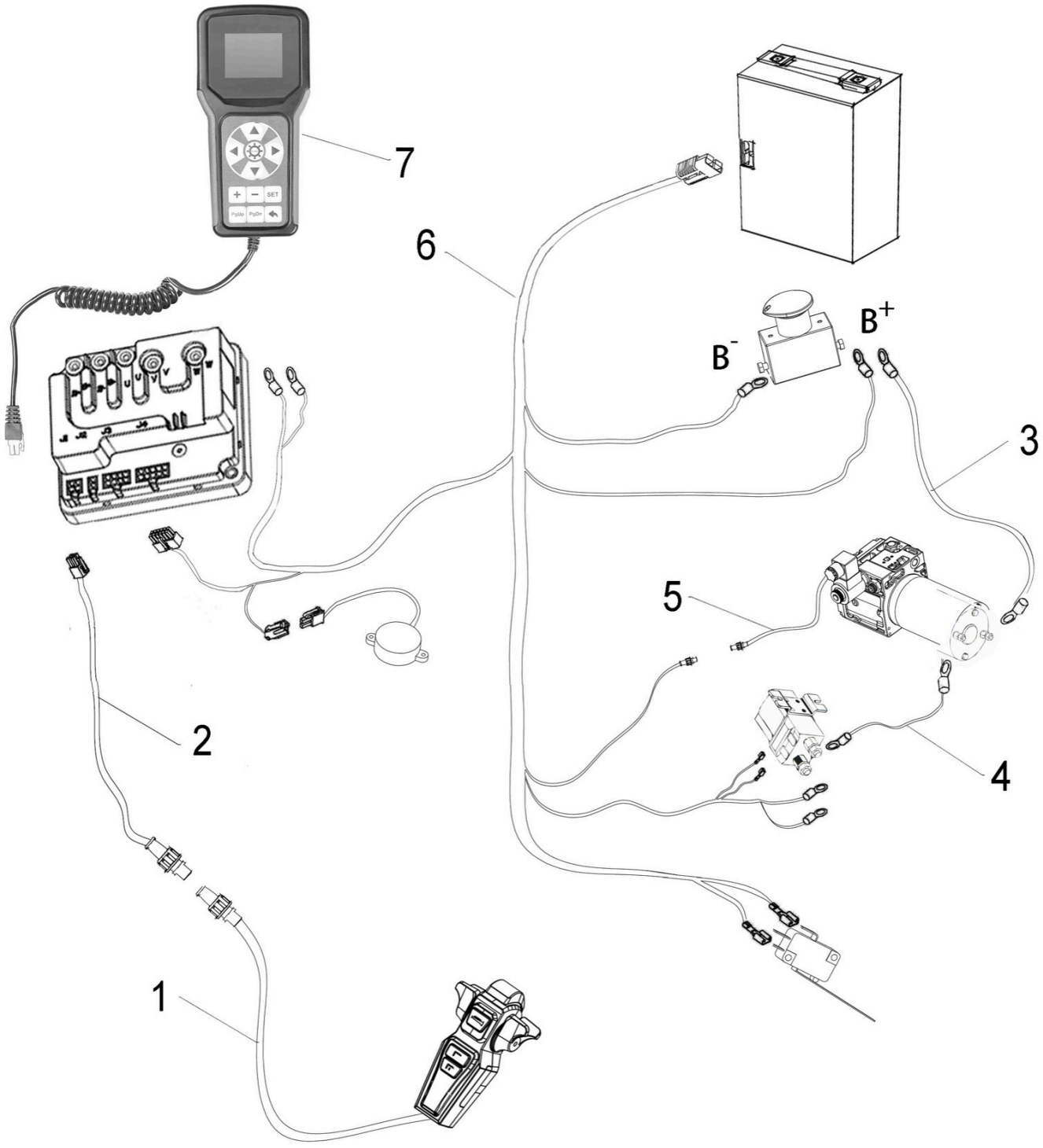

Figure 13 — Cable harness: parts

Item	Sumachay ref.	Description	Spec	Qty	Applies to
1	EPJ-F13-01	Handle cables		1	SESR15+ / SELR20+
1B	EPJ-F13-01B	Handle cables (alternate version)		1	SESR15+ / SELR20+
2	EPJ-F13-02	Truck body communication line		1	SESR15+ / SELR20+
2B	EPJ-F13-02B	Truck body communication line (alternate version)		1	SESR15+ / SELR20+
3	EPJ-F13-03	B+ lead wire for hydraulic motor		1	SESR15+ / SELR20+
4	EPJ-F13-04	B- lead wire for hydraulic motor		1	SESR15+ / SELR20+
4B	EPJ-F13-04B	B- lead wire for hydraulic motor (alternate version)		1	SESR15+ / SELR20+
5	EPJ-F13-05	Lead wire for lowering solenoid valve		1	SESR15+ / SELR20+
6	EPJ-F13-06	Truck body cable harness integration		1	SESR15+ / SELR20+
7	EPJ-F13-07	Hand Held Programmer		1	SESR15+ / SELR20+
8	EPJ-F13-08	Plug assembly (connector, plug, screws, handle)		1	SESR15+ / SELR20+
9	EPJ-F13-09	Insulating sleeve for positive terminal of hydraulic motor (Red)		1	SESR15+ / SELR20+
10	EPJ-F13-10	Insulating sleeve for negative terminal of hydraulic motor (Black)		1	SESR15+ / SELR20+
11	EPJ-F13-11	Insulating sleeve for contactor (Red)		1	SESR15+ / SELR20+